BASIC SAUNA COLLECTION

EN **Assembly Instructions for Sauna**

S1212B
S1515B
S1515RB
S1812B
S2015B
S2015RB
S2020B
S2020RB

30032016

Please read these instructions through before you start assembling. These instructions cover 8 sauna models, check the model you have purchased and make sure you follow the instructions relevant to that model. **This assembly instruction must be kept available for future maintenance.**

Notice:
The height of all Basic saunas is 1970 mm. The minimum room height required for sauna installation is 2050 mm.

Two people are needed when installing the wall and the ceiling elements.

Please note that wood is a natural material, which can swell, contract or warp due to dampness. Therefore, the assembly of some of the sauna parts may require some force.

Please ensure that you are installing your sauna on a heat resistant surface e.g. ceramic tiles or wooden floorboards.

For installation you need: screwdrivers or battery screwdriver with tips PZ1 and PZ2, steady stool or step-ladders, sharp knife and hammer.

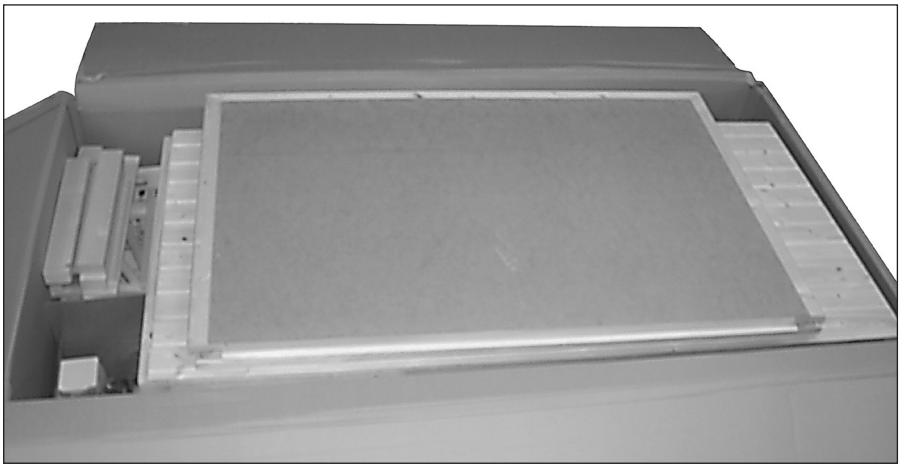

CONTENT OF DELIVERY

S1212B/S1812B

3 pc. wall element (marked A, B and C) **S1212B**
6 pc. wall element (marked A, B1, B2, C and E) **S1812B**
1 pc. wall element with glass door (marked D)
1 pc. ceiling element (marked H)
2 pc. bench (marked b)
4 pc. bench supports (44 x 70 x 400 mm) (marked bs)
1 pc. stove guard board (marked R)
1 pc. electrical heater, D 3,6 kW
1 pc. stones for heater ca. 10 kg
1 pc. thermometer
1 pc. copper bucket
1 pc. copper laddle
1 pc. sauna lamp
1 pge door-handle with fastening material
1 pge sauna-sign with fastening material
1 set tongue and groove board

fastening material:
4 pc. screw 5 x 80 mm, for feet of wall elements
8 pc. screw 5 x 80 mm, for bench supports
8 pc. screw 4,5 x 60 mm, for ceiling element
16-24 pc. screw 4,5 x 45 mm, for wall elements
4 pc. screw 4,5 x 45 mm, for benches
2 pc. screw 4,5 x 45 mm, for stove guard board
30 pc. nail, for fastening tongue and groove board
2 pc. plastic plug for stove guard board

S1515B/S1515RB/S2015B/S2015RB/S2020B/S2020RB

7-8 pc. wall element (marked A1, A2, B1, B2, C1, C2 (not in **S2015RB/S1515RB**), E1 (not in **S1515B/S1515RB**) and E2 (not in **S1515RB**))
1 pc. wall element with glass door (marked D)
2 pc. ceiling element (marked H)
2 pc. bench (marked b)
4 pc. bench supports (44 x 70 x 500 mm) (marked bs)
2 pc. heater support board (marked hs) (not in **S2015RB/S1515RB/S2020RB**)
1 pc. stove guard (marked R)
1 pc. electrical heater, KKIP 6,0 kW
1 pc. stones for heater ca. 20 kg
1 pc. thermometer
1 pc. copper bucket
1 pc. copper laddle
1 pc. sauna lamp
1 pge door-handle with fastening material
1 pge sauna-sign with fastening material
1 set tongue and groove board

fastening material:
4 pc. screw 5 x 80 mm, for feet of wall elements
8 pc. screw 5 x 80 mm, for bench supports
8 pc. screw 4,5 x 60 mm, for ceiling element
36 pc. screw 4,5 x 45 mm, for wall elements
8 pc. screw 4,5 x 45 mm, for benches
4 pc. screw 4,5 x 60 mm, for stove guard
40 pc. nail, for fastening tongue and groove board
2 pc. screw 4,5 x 60 mm, fastening upper bench to back wall

1

S1212B/S1812B:
Wall elements are marked A, B (B1, B2), C and D (E).
S1212B:
Start installation with elements D and A, as shown in picture 1.
S1812B:
Start installation with elements A and B1.

S1515B/S1515RB/S2015B/S2015RB/S2020B/S2020RB:
Walls are marked A1, A2, B1, B2, C1, C2 (not in **S2015RB/S1515RB**), E1 (not in **S1515B/S1515RB**) and E2 (not in **S1515RB**). Start installation with elements A2 and B1.

2

There are 4 pilot holes for screws in the elements for fastening the elements together. Screw size is 4.5 x 45 mm. Fasten screws by using a battery-operated screwdriver or a screwdriver with PZ tip, as shown in picture 2.

3

S1212B:
Continue installation in clockwise direction. Fasten element B to A. Use screws to fasten the elements together. Picture 3.

S1812B:
Fasten element B2 to B1 and so on until element D is installed.

S1515B/S1515RB/S2015B/S2015RB/S2020B/S2020RB:
Continue installation in clockwise direction. Fasten element B2 to B1 and C1 to B2 and so on until element E1 (E2 in **S1515B**) is installed.

Make sure that internal and external corner boards are finished neatly.

4

S1212B:
Connect element C to element B. Finally fasten the other end of element C to element D. Picture 4.

S1812B:
Connect element D to element E and finally A to E.

S1515B/S1515RB/S2015B/S2015RB/S2020B/S2020RB:
Connect element D to element E1. Connect element E2 (or element E1 in **S2015RB/S1515RB**) to the other side of element D. Finally place element A1 to E2 (not in **S2015RB/S1515RB)**.

Lock the corner elements together also from foot. Use 5.0 x 80 mm screws for this purpose, as shown in pictures 5 and 6.

Place the ceiling element(s).

Fasten the ceiling element(s) using 4.5 x 60 mm screws.

Install the loose cover panel boards as shown in pictures 13 a) and 13 b).

Fasten boards with nails.

Measure and mark places for bench supports as shown in pictures 15 and 16.

12

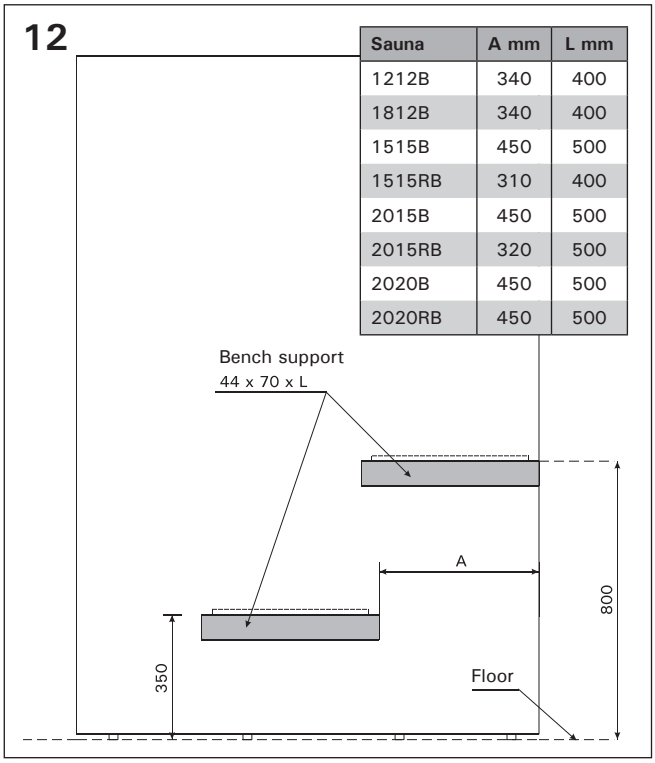

Sauna	A mm	L mm
1212B	340	400
1812B	340	400
1515B	450	500
1515RB	310	400
2015B	450	500
2015RB	320	500
2020B	450	500
2020RB	450	500

13

Fasten the bench supports with 5 x 80 mm screws (8 pcs).

14

Install the lamp according to separate instructions.

15

S1515B/S1515RB/S2015B/S2015RB/S2020B/S2020RB: Measure and mark places for support boards to the wall on which the heater will be placed. (The wall on your left hand side when you enter the cabin). Upper edge of the lower board should be at height of 390 mm from floor and upper edge of the upper board should be at height of 590 mm.

16

S1212B/S1812B:
After the heater has been installed according to separate instructions: Place the stove guard board with 4.5 x 45 mm screws. Finalise installation with plastic cover plugs.

17 a)

b)

S1515B/S1515RB/S2015B/S2015RB/S2020B/S2020RB: Fasten the stove guard with 4,5 x 60 mm screws. Pictures 21 a) and b).

18

Finalise installation by fastening the Sauna-sign as shown in picture 22.

INSTALLATION OF THE SAUNA LIGHT

Your sauna is equipped with a sauna light. Installation of the sauna light is preferable, but not obligatory since the glass door of the sauna allows light into the cabin.

When the light is installed these instructions should be followed, if the sauna is equipped with a separate control unit:

- The light should be connected as part of the house lighting circuit and it should be connected to a separate switch. The switch should be located outside the sauna room and should be installed according to the IEE wiring regulations.
- Supply voltage: 230/240 V, single phase
- Light bulb: type E14, recommended 25-40 W (max. 40 W). Bulb is not included.
- Type of supply cable: 2 x 1,5 mm^2, heat resistant min. 170 ^{0}C

It is necessary to drill a hole through the timber wall for the supply cable. The following pictures show how the electrical connection should be made:

Note! Only a professional electrician is allowed to do the installation. Use only light sources and rated wattages as marked in the luminaire. Switch off the current before installation or service.

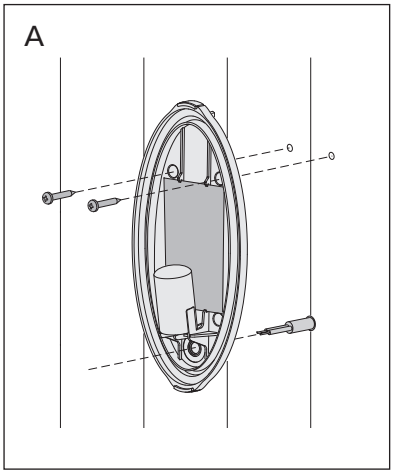

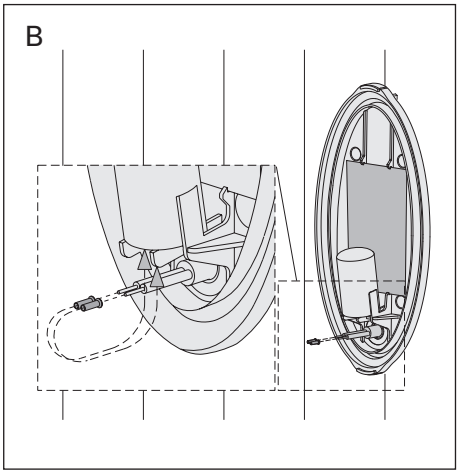

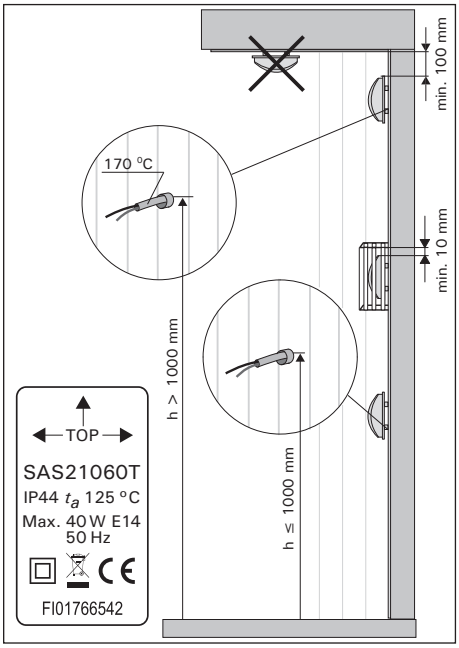

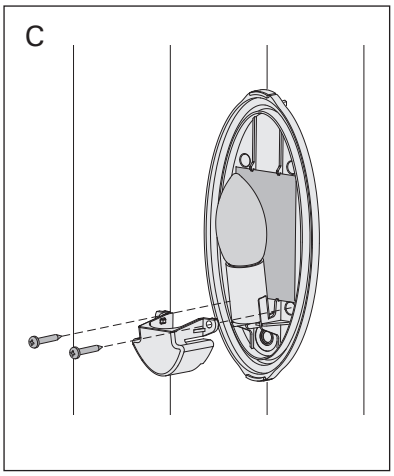

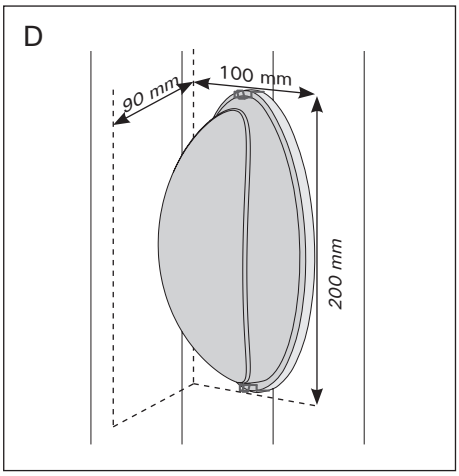

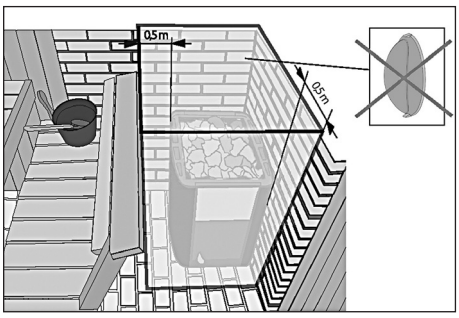

S1212B

h = 1970 mm

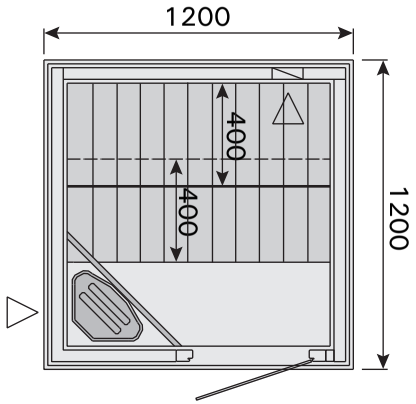

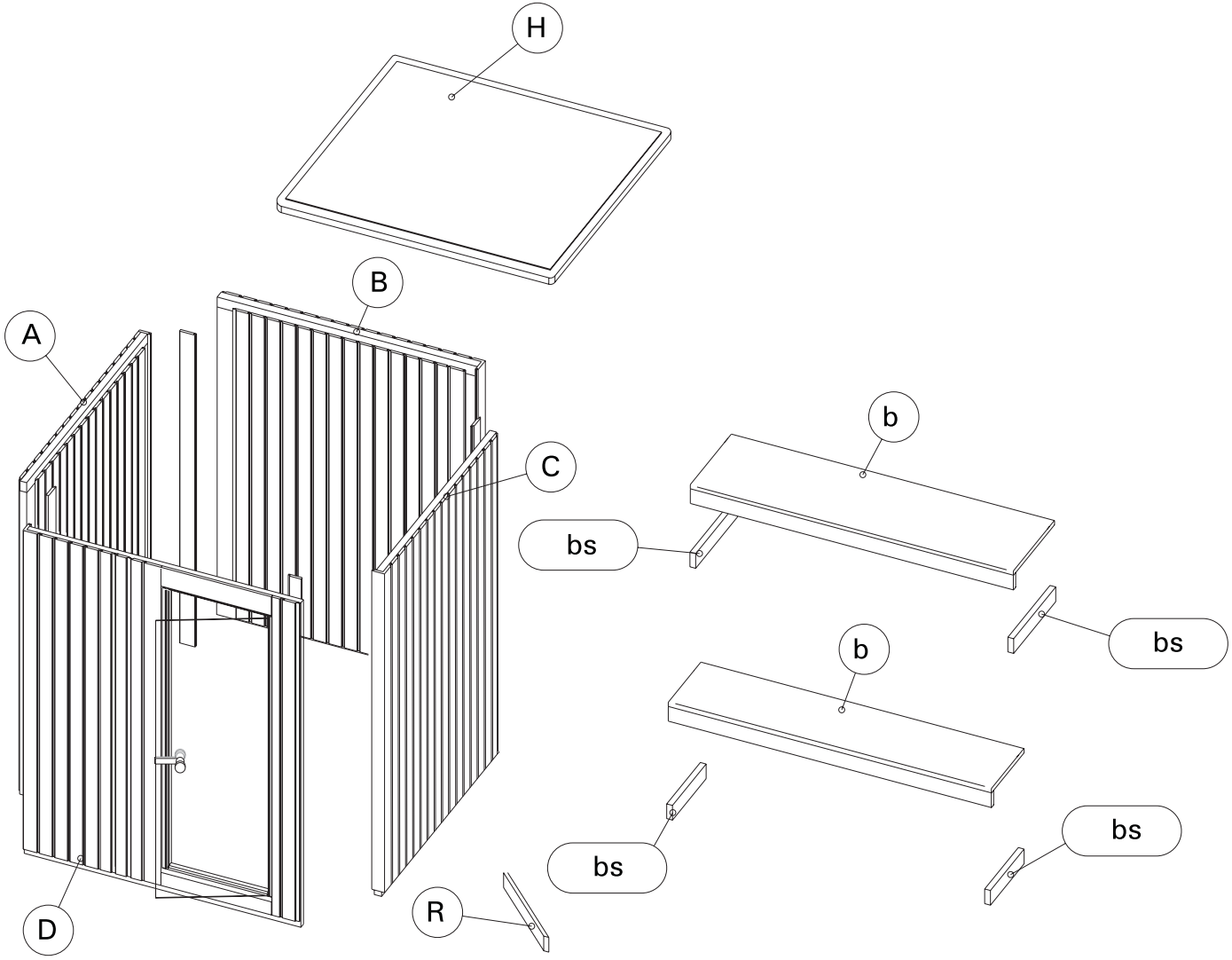

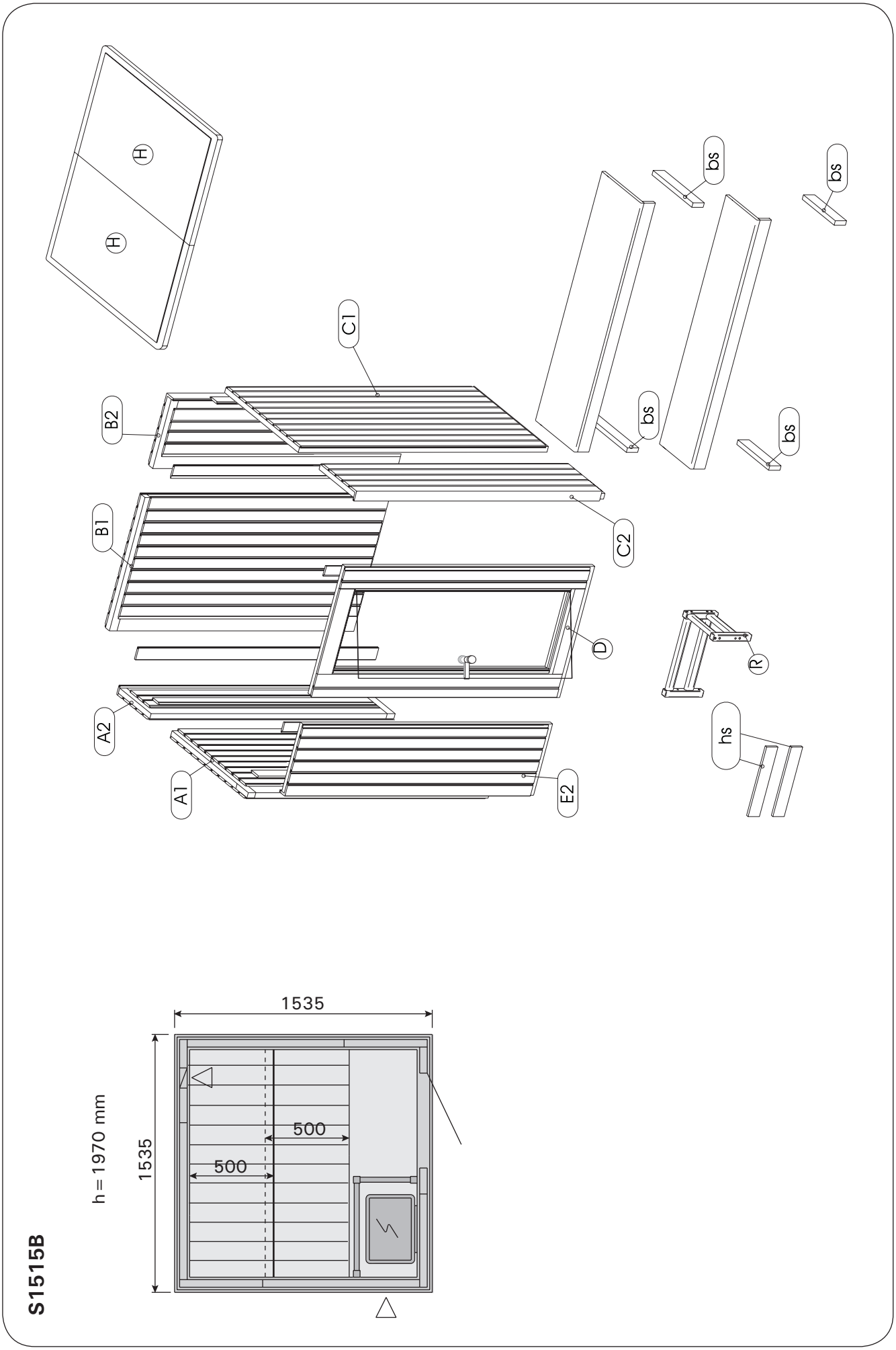
H
H
C1
B2
B1
A2
A1
D
C2
E2
bs
bs
bs
bs
R
hs
1535
1535
500
500
h = 1970 mm
S1515B

S1515RB

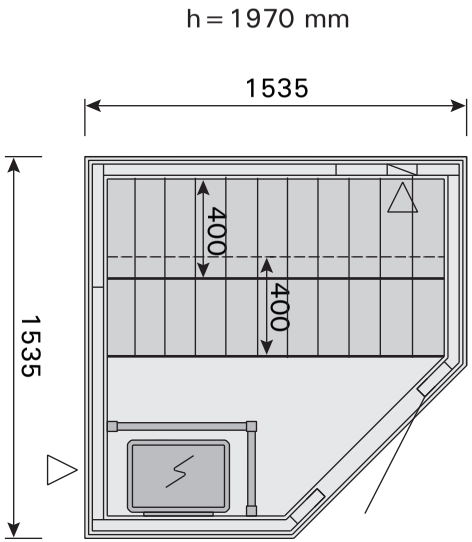

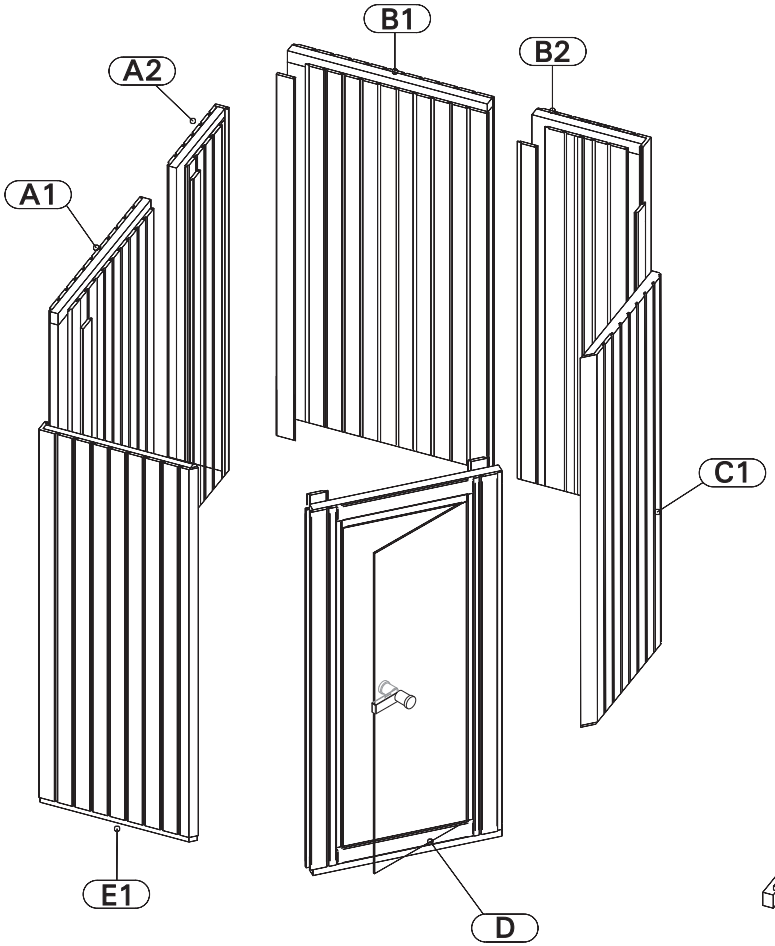

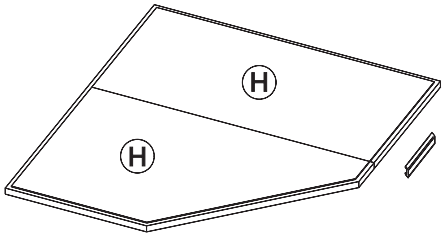

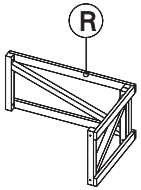

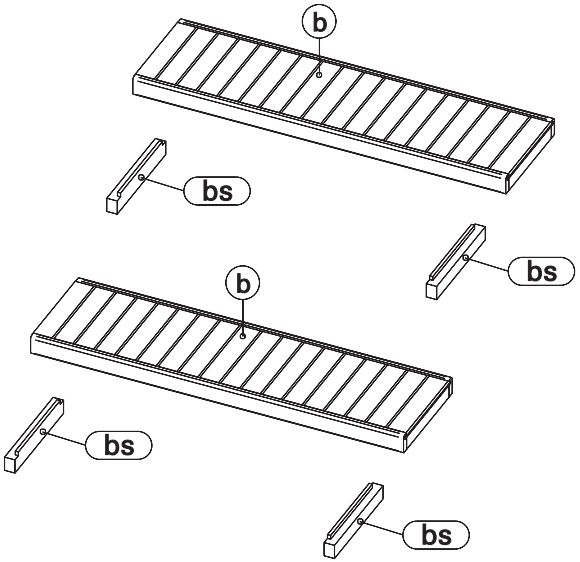

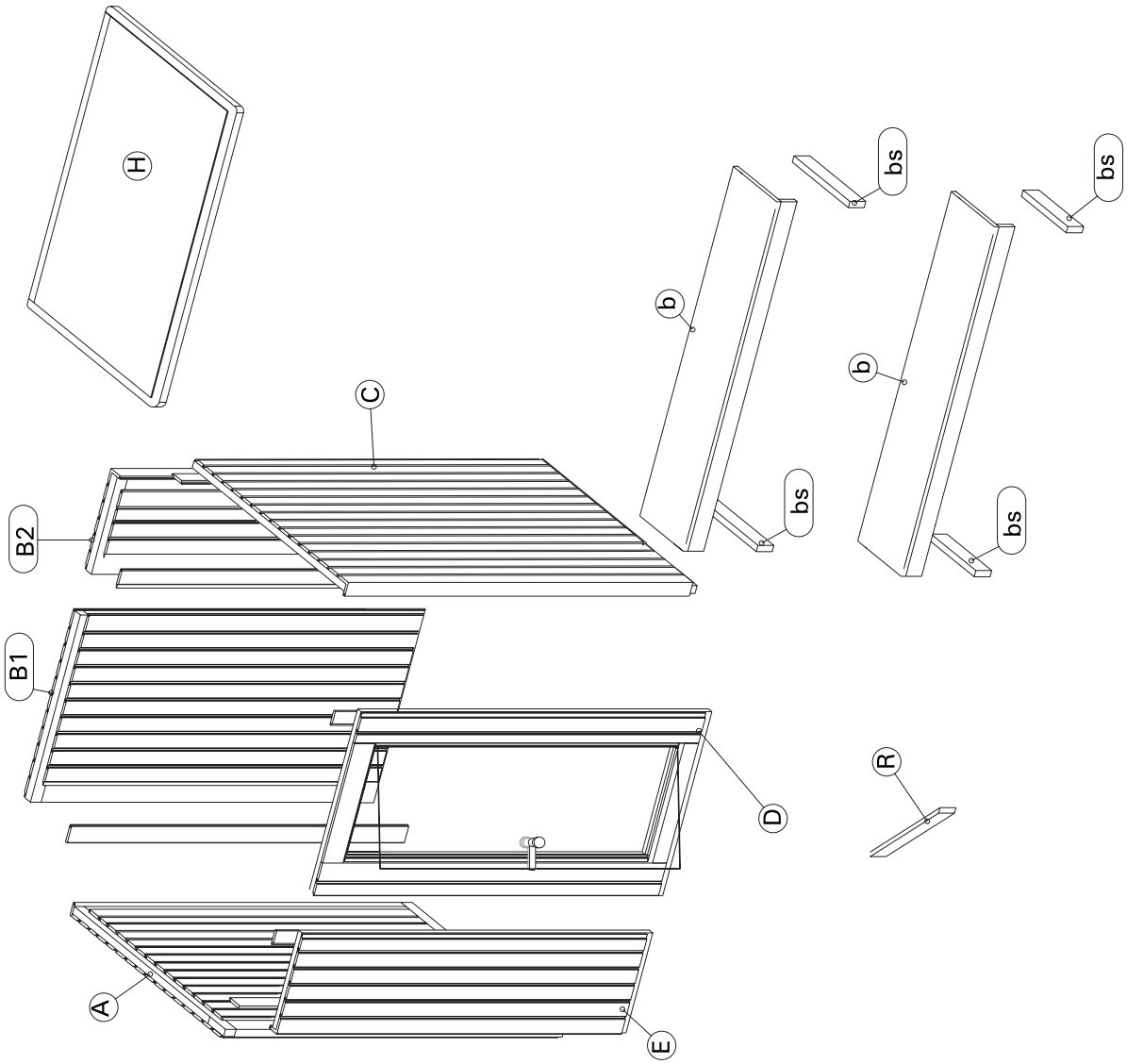

S1812B

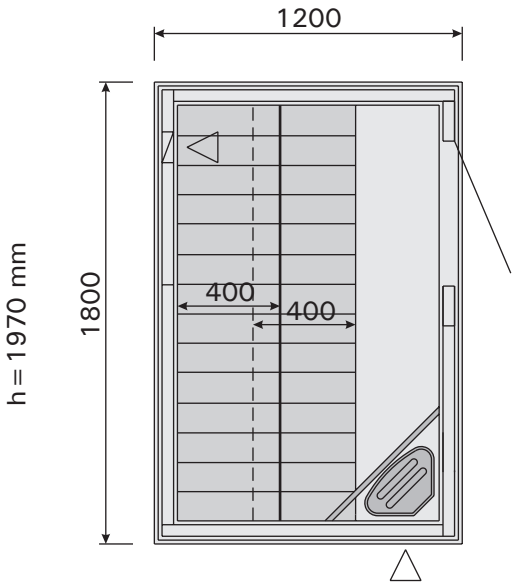

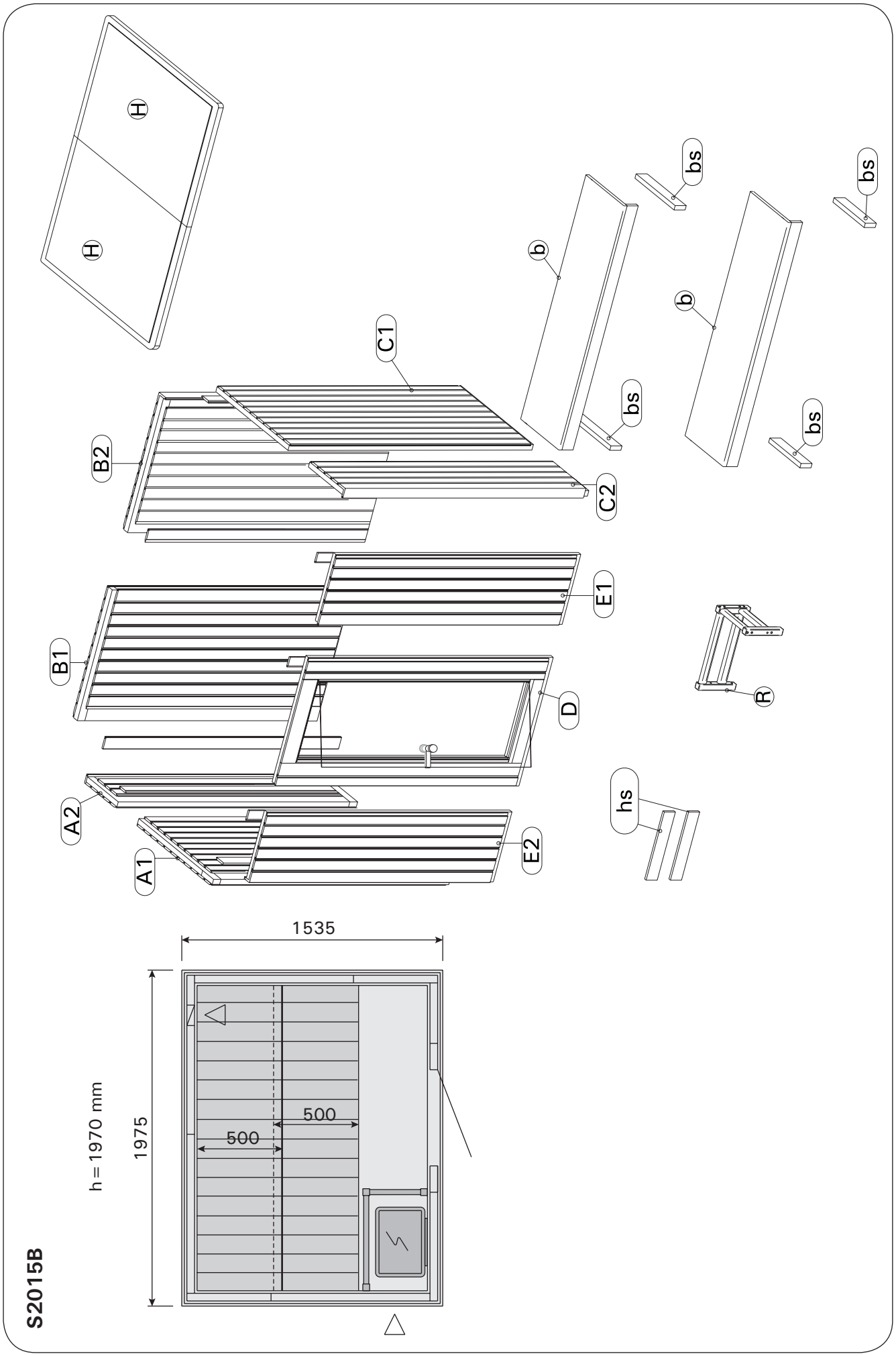
H
H
C1
B2
C2
b
bs
bs
b
bs
bs
E1
B1
D
R
A2
A1
E2
hs
1535
h = 1970 mm
1975
500
500
S2015B

S2015RB

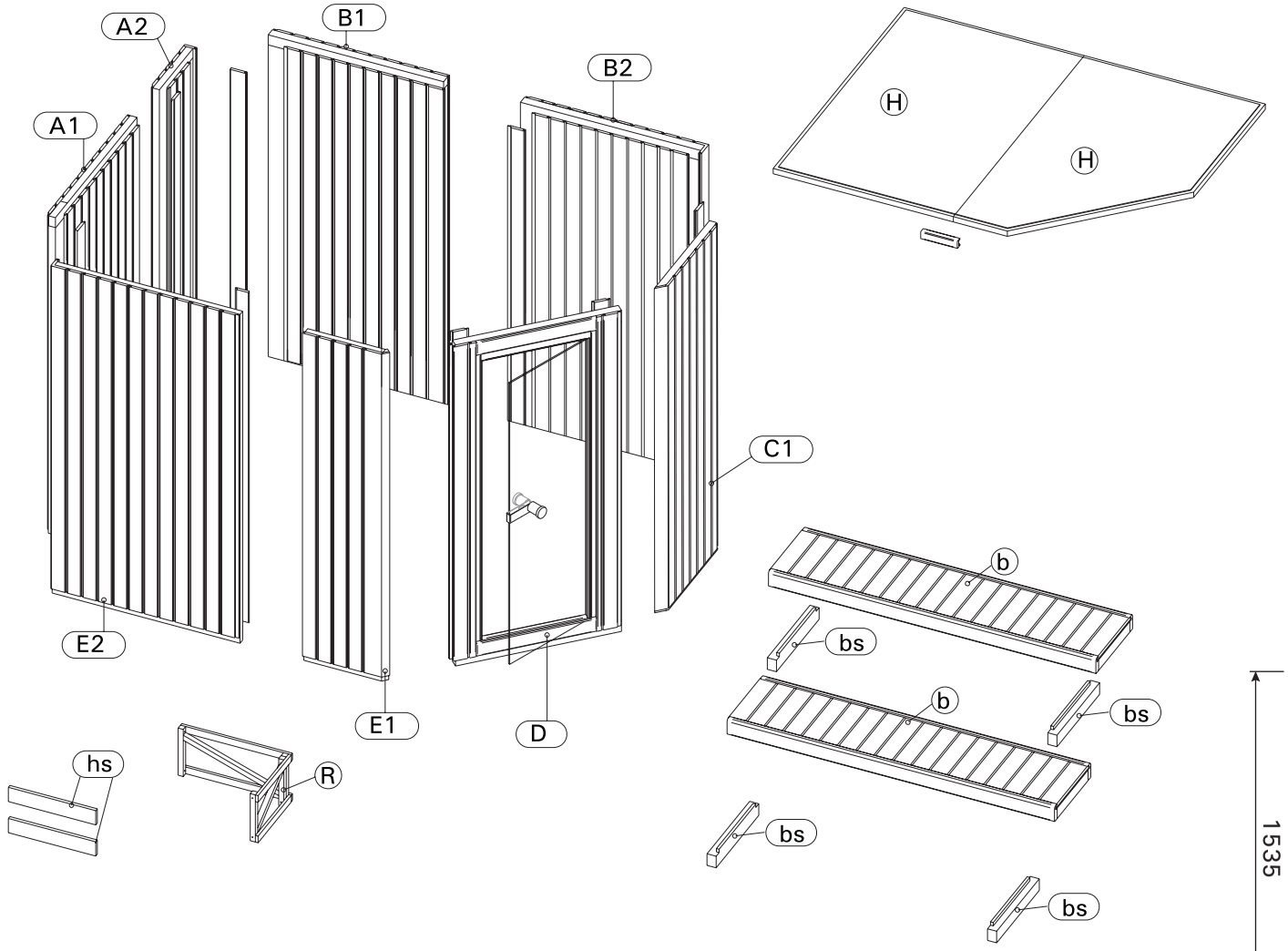
A2
B1
B2
A1
H
H
C1
b
bs
b
bs
E2
E1
D
hs
R
bs
bs

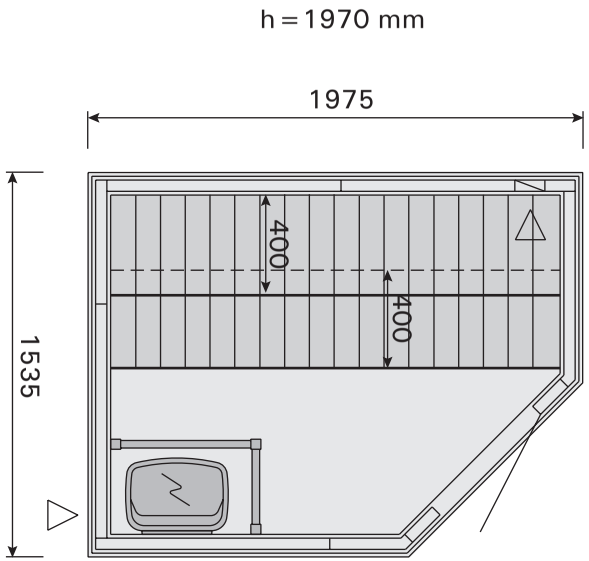
h = 1970 mm
1975
400
400
1535

S2020B

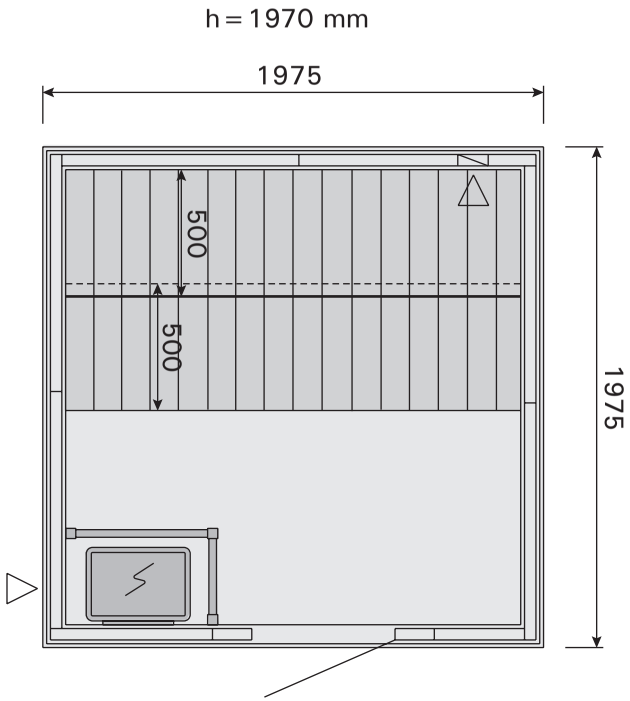
h = 1970 mm
1975
500
500
1975

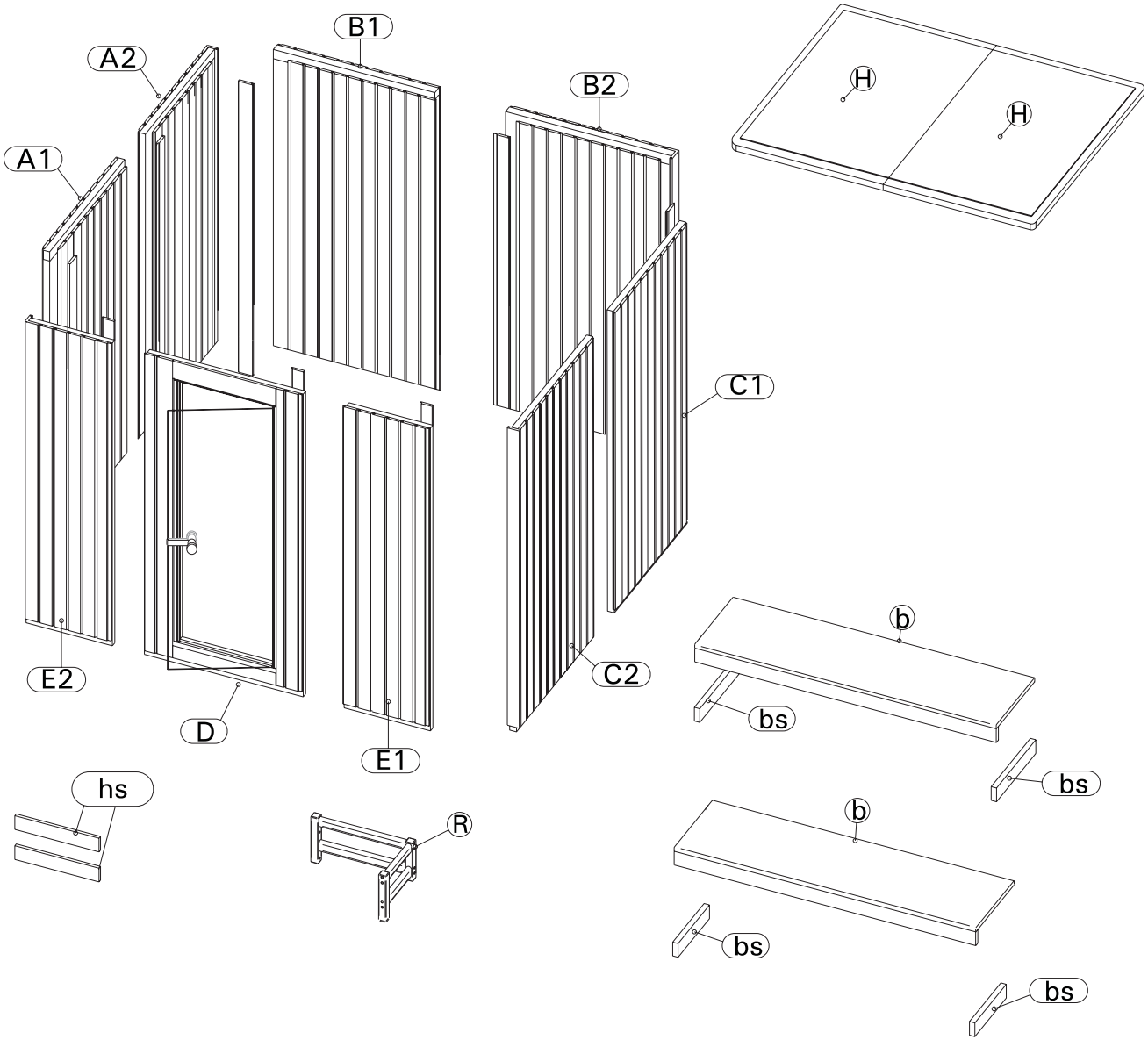
A1
A2
B1
B2
H
H
C1
C2
E2
D
E1
b
bs
bs
hs
R
b
bs
bs

S2020RB

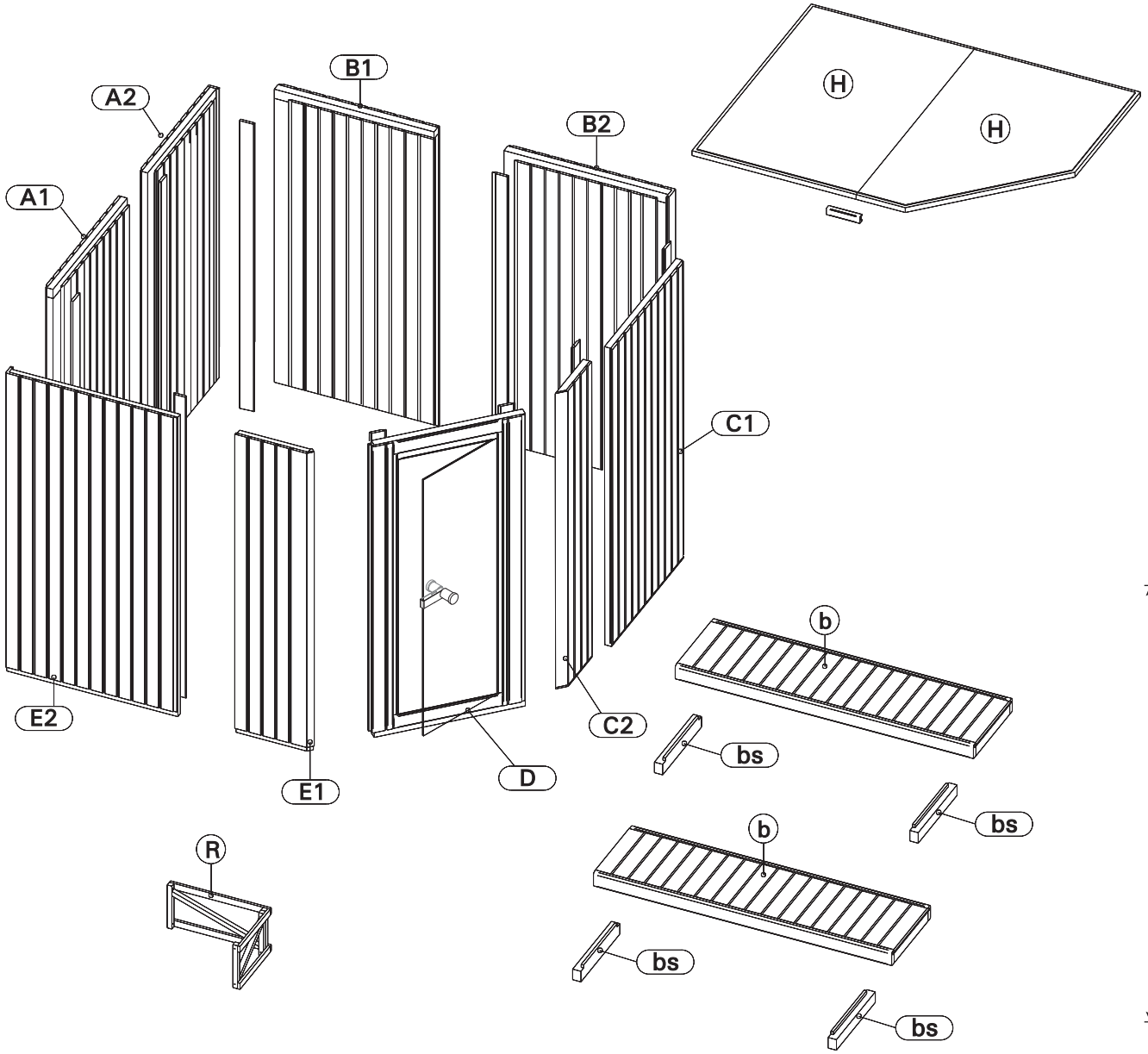
A2
A1
B1
B2
H
H
C1
E2
E1
D
C2
b
bs
bs
b
R
bs
bs

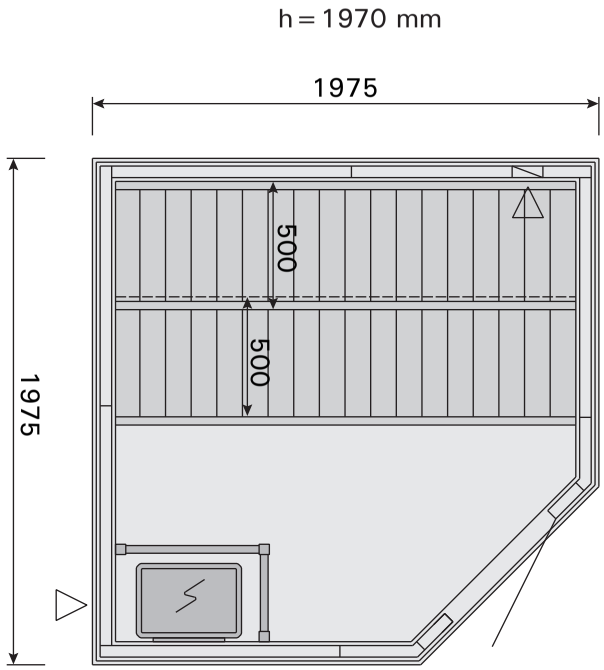
h = 1970 mm
1975
1975
500
500

INSTRUCTIONS FOR USE OF SAUNA HEATER

1. Control of the heater and use

The heaters are equipped with a timer and a thermostat on the lower part of the heater.

Before you switch the heater on check always that there aren't any things over the heater or in the near distance of the heater.

1.1. Timer and thermostat

Timer

The heater is switched on by using the timer switch. The timer has two scales: the first one (with larger figures) is the "instantly on" section; that is, the heater is on for a selected period of time (0–4 hours). The other section is the so called "pre-set section" (1–8 hours), which is used to start the heater after a certain time. The heater starts when the timer has turned the switch back to the "instantly on" section, that is, at number four (4). After this, the heater will be on for about 4 hours, unless the switch is turned to zero before that. At zero (0), the supply to the elements is cut off and the heater is switched off. See fig 1.

Example 1. You want to go jogging and have a sauna bath after that. The estimated duration of your run is 5 hours. Turn the timer clockwise over the scale 0–4 to the pre-set section (scale 1–8) at number 4.

The timer will start, and after four hours, the heater will come on. Because it takes about one hour for the sauna to be heated, it will be warm and ready for bathing after about 5 hours, that is, when you come back from your run.

Example 2. If you want to bathe "immediately" and thus do not want to use the pre-set timing, the timer must be set to the desired point in the section 0–4. Then, the heater will be switched immediately on and the sauna will be ready for bathing after about one hour.

Switch the heater off immediately after bathing and check that the sauna stones are dry. Sometimes it may be advisable to leave the heater on for a while to let the wooden parts of the sauna dry properly.

NOTE! It is absolutely necessary to check that the timer has cut off the supply of the elements after the set time.

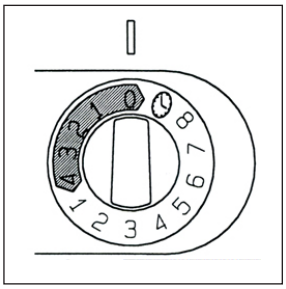

Figure 1. Timer

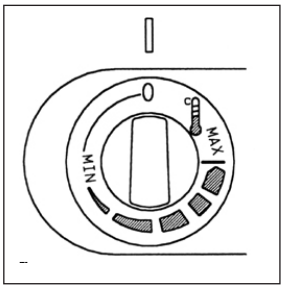

Figure 2. Thermostat

Thermostat and Overheating Limiter

The thermostat consists of two units; the adjustable unit aims to keep the temperature of the sauna room stable.

The temperature is adjusted by the thermostat to a position between minimum and maximum. The correct position of the thermostat switch is found by experimenting.

Begin experimenting at the maximum position (far right) to find how quickly the sauna room and stones can be heated to the desired temperature. If, during bathing, the temperature seems to be becoming too high, turn it down a little by turning the switch counter-clockwise. It must be noted that even a small difference within the maximum section will change the temperature of the sauna considerably. See fig. 2.

If, for some reason, the temperature of the sauna room becomes too high, the overheating limiter of the thermostat will permanently cut off the supply of the resistances. The overheating limiter cannot be reset to the position allowing electricity into the thermostat until the heater has cooled down. The overheating limiter is reset by pressing the reset button of the thermostat, which is located in the connection box inside the heater. Only persons authorised to carry out electrical installations can reset the overheating limiter.

Prior to pressing the button, the cause of the fault must be found:

- are the stones crumbled and pressed together?
- has the heater been on for a long time while unused?
- is the sensor support of the thermostat bent
- against the side of the stone compartment?
- has the heater been banged or shaken?

2. Throwing Water on Heated Stones

The air in the sauna room becomes dry when warmed up. Therefore, it is necessary to throw water on the heated stones to reach a suitable level of humidity in the sauna.

The humidity of the air in the sauna room is controlled by the amount of water thrown on the stones. A correct level of humidity makes the bather's skin sweat and makes breathing easy. By throwing water on the stones with a small ladle, the bather should feel the effect of air humidity on his skin. Both too high a temperature and air humidity will give an unpleasant feeling.

Staying in the hot sauna for long periods of time makes the body temperature rise, which may be dangerous.

The maximum volume of the ladle is 0.2 litres. The amount of water thrown on the stones at a time should not exceed 0.2 l, because if an excessive amount of water is poured on the stones, only part of it will evaporate and the rest may splash as boiling hot water on the bathers.

Never throw water on the stones when there are people near the heater, because hot steam may burn their skin.

2.1. Sauna Water

The water to be thrown on the heated stones should meet the requirements of clean household water. The factors essentially affecting the quality of water include the following:

- humuos content (colour, taste, precipitates); recommended content less than 12 mg/litre.
- iron content (colour, smell, taste, precipitates); recommended content less than 0.2 mg/litre.
- hardness – the most important substances are manganese (Mn) and calcium (Ca); recommended content of manganese 0.05 mg/litre, calcium less than 100 mg/litre.

Calcareous water leaves a white, sticky layer on the stones and metal surfaces of the heater. Calcification of the stones deteriorates the heating properties.

Ferrous water leaves a rusty layer on the surface of the heater and elements, and causes corrosion.

The use of humous, chlorinated water and seawater is forbidden.

Only special perfumes designed for sauna water may be used. Follow the instructions given on the package.

3. Instructions for Bathing

- Begin by washing yourself; for example, by taking a shower.
- Stay in the sauna for as long as you feel comfortable.
- According to established sauna conventions, you must not disturb other bathers by speaking in a loud voice.
- Do not force other bathers from the sauna by throwing excessive amounts of water on the stones.
- Forget all your troubles and relax.
- Cool your skin down as necessary.
- If you are in good health, you can have a swim if a swimming place or pool is available.
- Wash yourself properly after bathing. Have a drink of fresh water or a soft drink to bring your fluid balance back to normal.
- Rest for a while and let your pulse go back to normal before dressing.

Delta (D36)

Open the screw as shown in picture 1.

Pull out the plastic body. Fitting is tight so some force may be required.

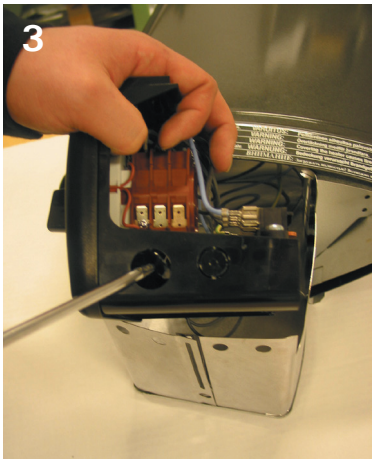

For supply cable, push in the cover of the opening as shown in picture 3.

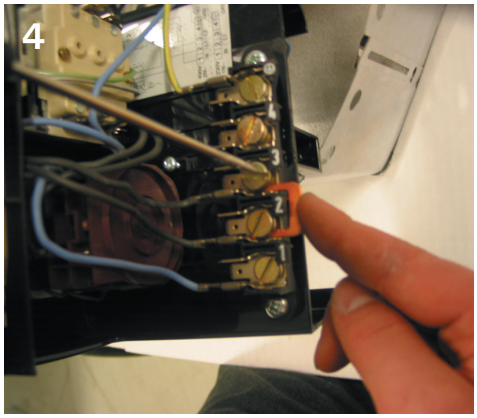

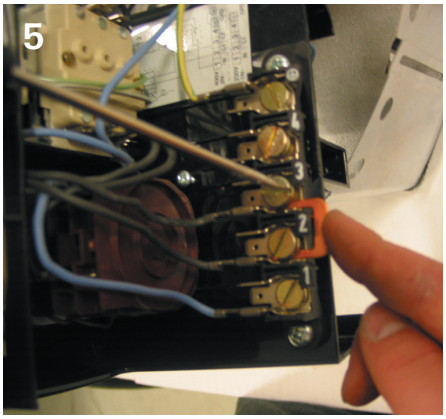

If supply voltage is single phase, change the placing of the copper bridges from terminals 3-4 to terminals 2-3. Please check separate instructions delivered with the heater.

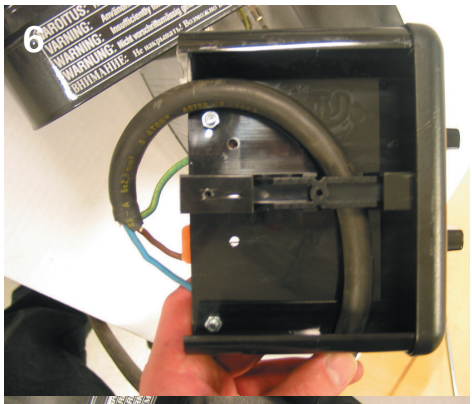

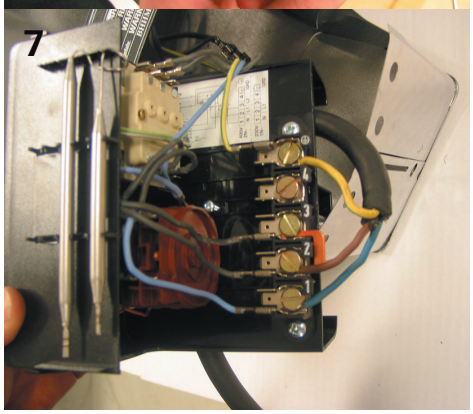

Install the supply cable as shown in pictures 6 and 7.

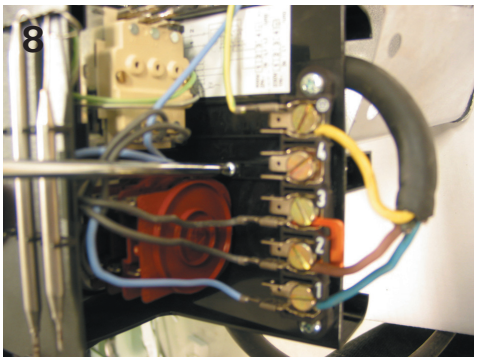

Tighten the fastening screw.

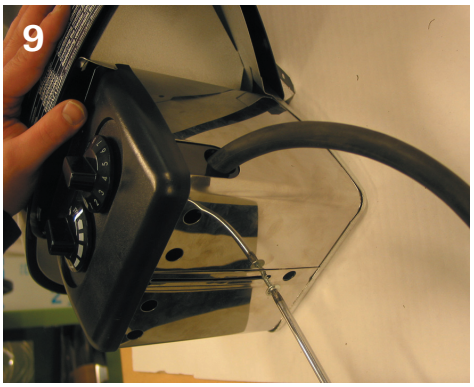

Push the plastic body back in place. Tighten the screw.

KIP 60

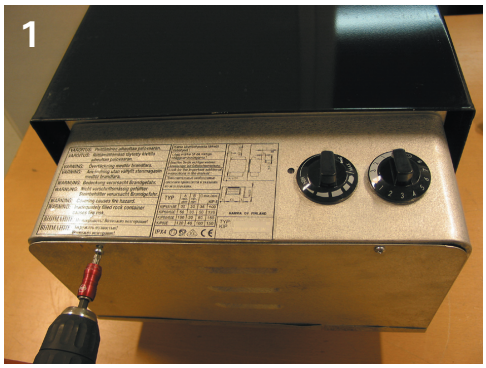

Open the screws as shown in picture.

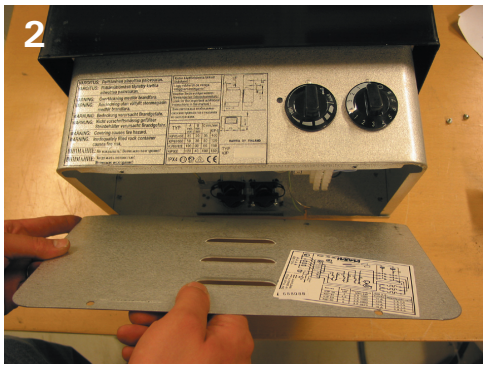

Remove the cover plate by pulling it towards you.

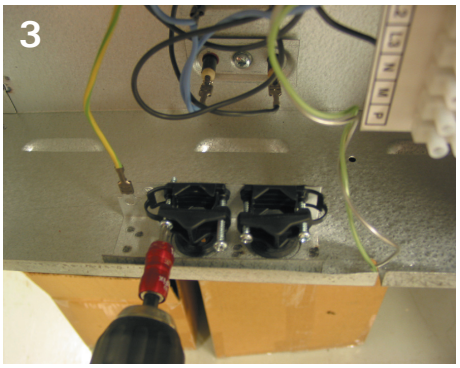

Loosen the screws of the cable holder.

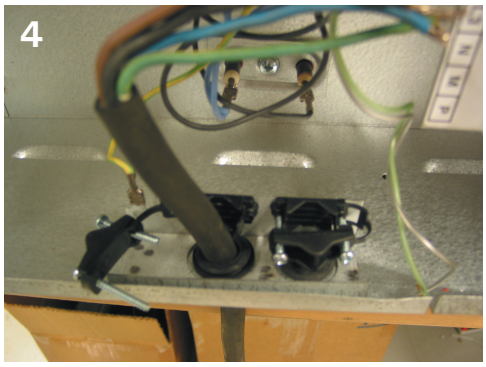

Pull the feeding cable through the cable hole. Make sure that black silicon sealing will stay on its place.

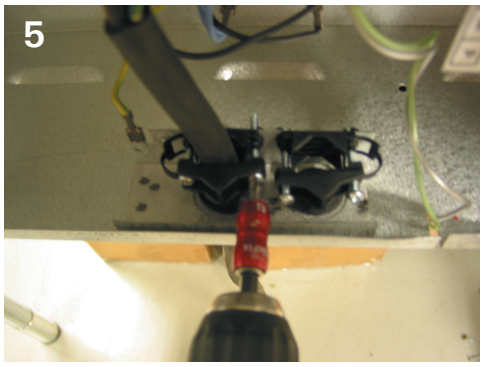

Fasten the screws of the cable holder.

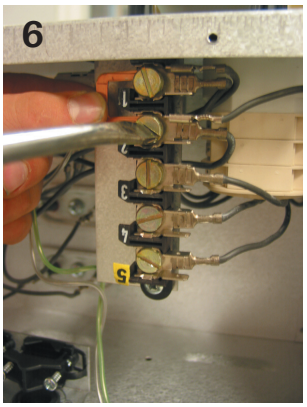

Loosen the screws 1 and 2.

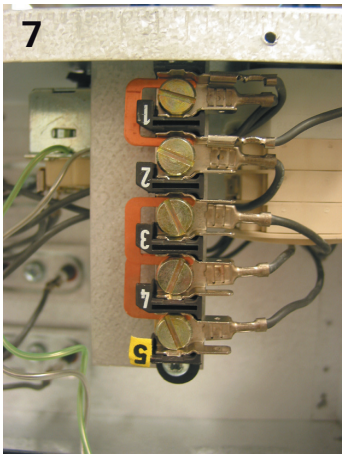

Place copper bridges as shown in picture.

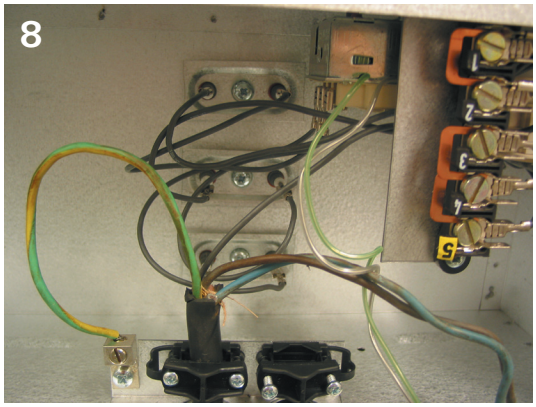

Fasten the ground wire.

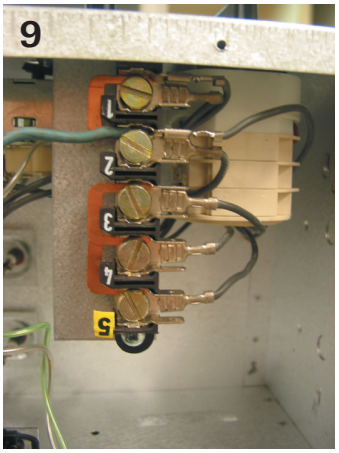

Fasten the neutral wire.

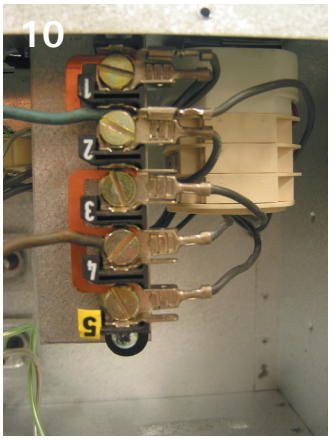

Fasten the phase wire.

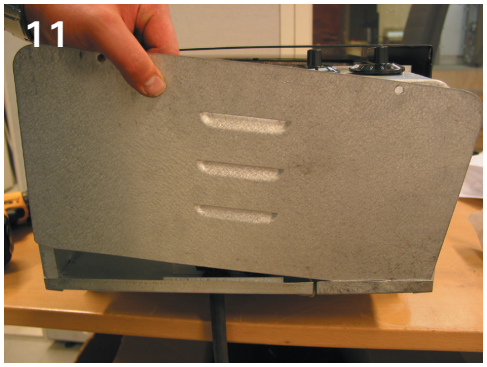

Place the cover plate and fasten it with screws.